Read before installation.
All bolts have to be finaly tighten after installation all parts on vehicle.

Rear rack for soft luggage

Kove 800X

ID:3059970

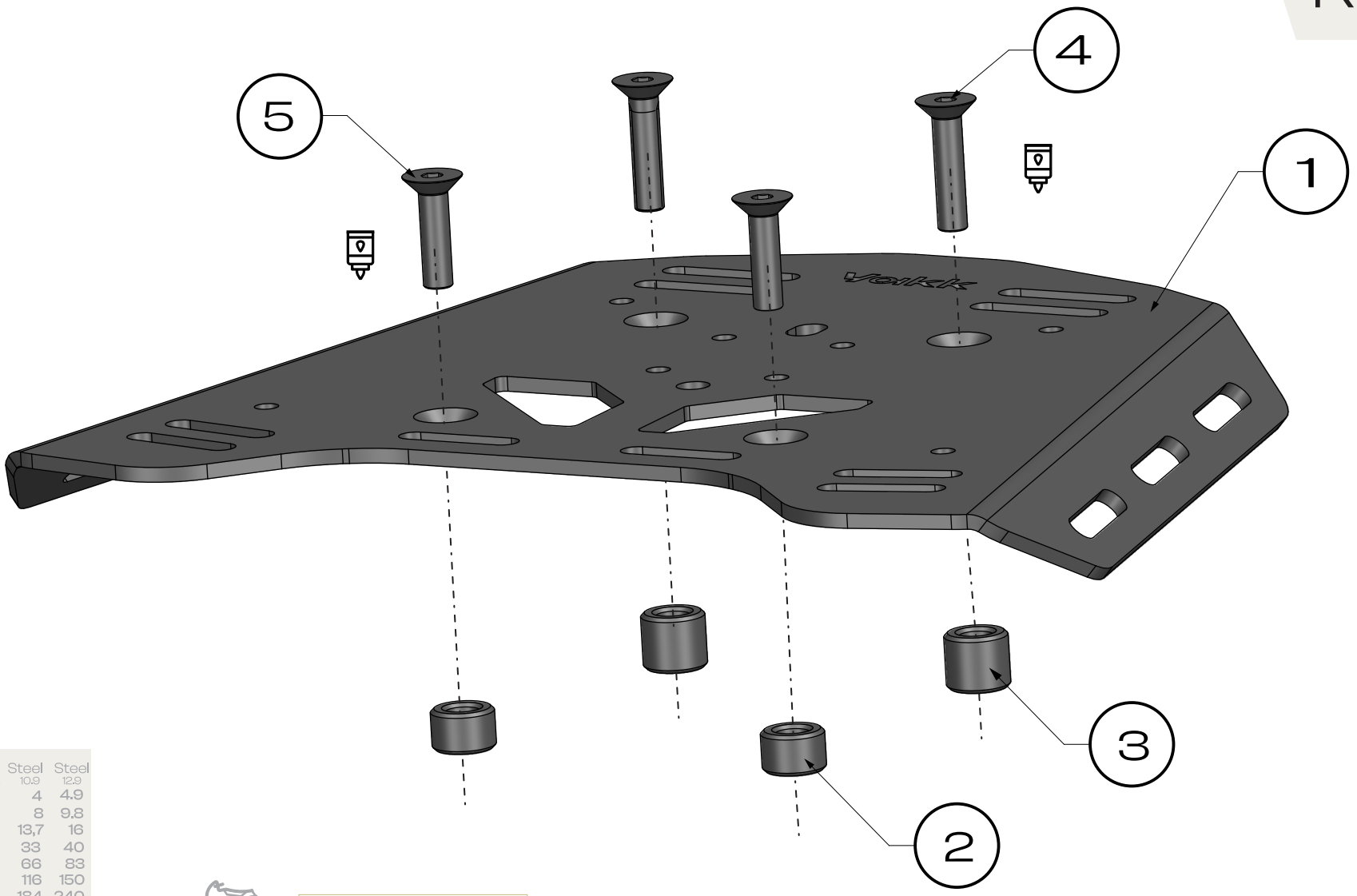

Fig. 1

	Steel 8.8	Steel 10.9	Steel 12.9
M4	2,7	4	4.9
M5	5,5	8	9.8
M6	9,7	13,7	16
M8	23	33	40
M10	47	66	83
M12	80	116	150
M14	130	184	240
M16	196	287	350
M18	270	395	490
M20	385	560	690

1 Luggage rack plate



1×

2 Space sleeve



D17xd9xH11 2×

3 Space sleeve



D17xd9xH15 2×

4 Bolt



M8x35 -DIN 7991 2×

5 Bolt



M8x30 -DIN 7991 2×

one person | use a medium-stregth | tighten with torque | OEM Original Equipment Manufacturer

Vakk EXP

assembly instructions

yakkexp.com

EXPLORE POSSIBILITIES

!!! Initially, attach the screws loosely.
After assembling everything together, tighten them with the appropriate force.

follow yakkexp join #yakkherd

1. Unscrew the screws and remove the OEM rack. **[Fig. 1]**
2. Insert the spacer sleeve **[2]** and [3] into the mounting point. **[Fig. 1]**
3. Fasten Luggage rack plate **[1]** using bolts [4] and **[5].** Apply a medium-strength threadlocker and tighten to the specified torque. **[Fig. 3]**

2 Space sleeve



D17xd9xH11 2×

3 Space sleeve



D17xd9xH15 2×

1 Top case plate



1×

4 Bolt



M8x35 -DIN 7991 2×

5 Bolt



M8x30 -DIN 7991 2×

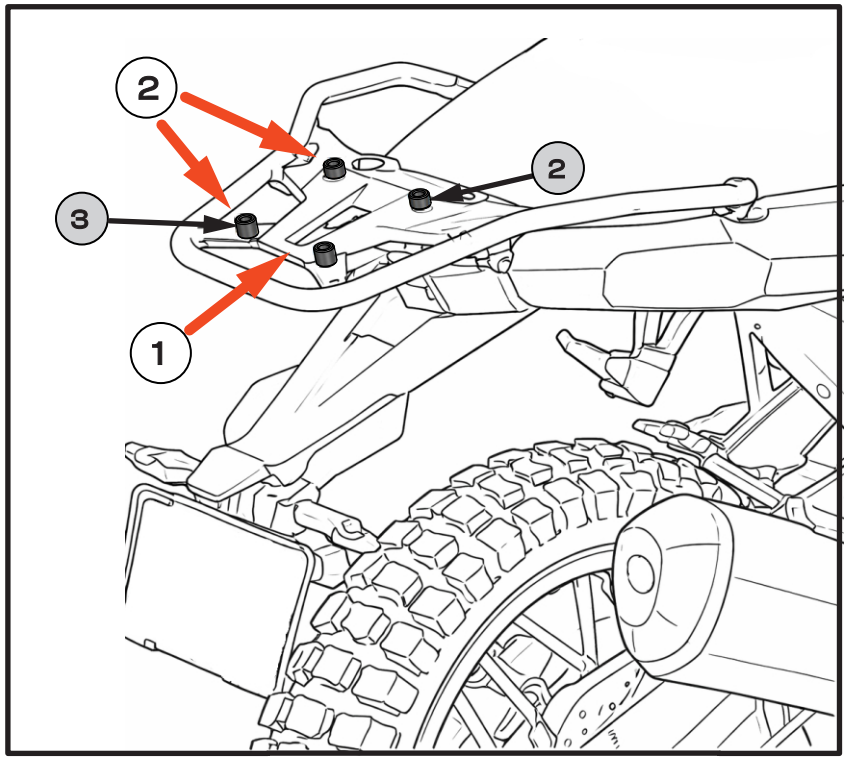

Fig. 2

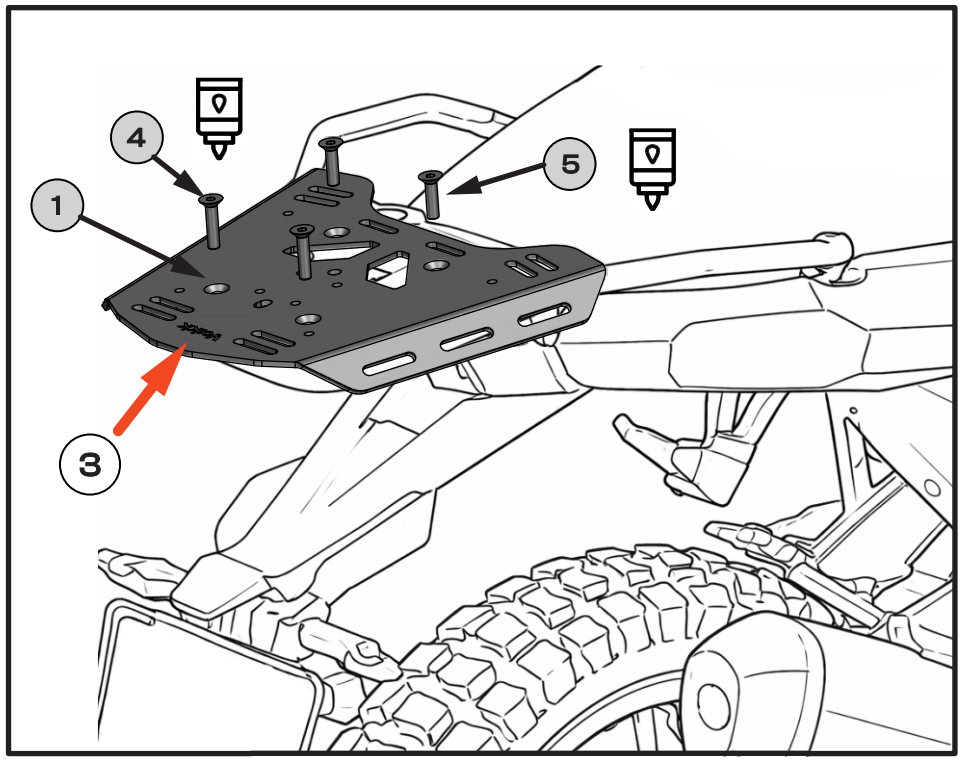

Fig. 3