Read before installation.
All bolts have to be finaly tighten after installation all parts on vehicle.

Rear rack for soft luggage

Honda CRF 1100 -23

ID:3081373

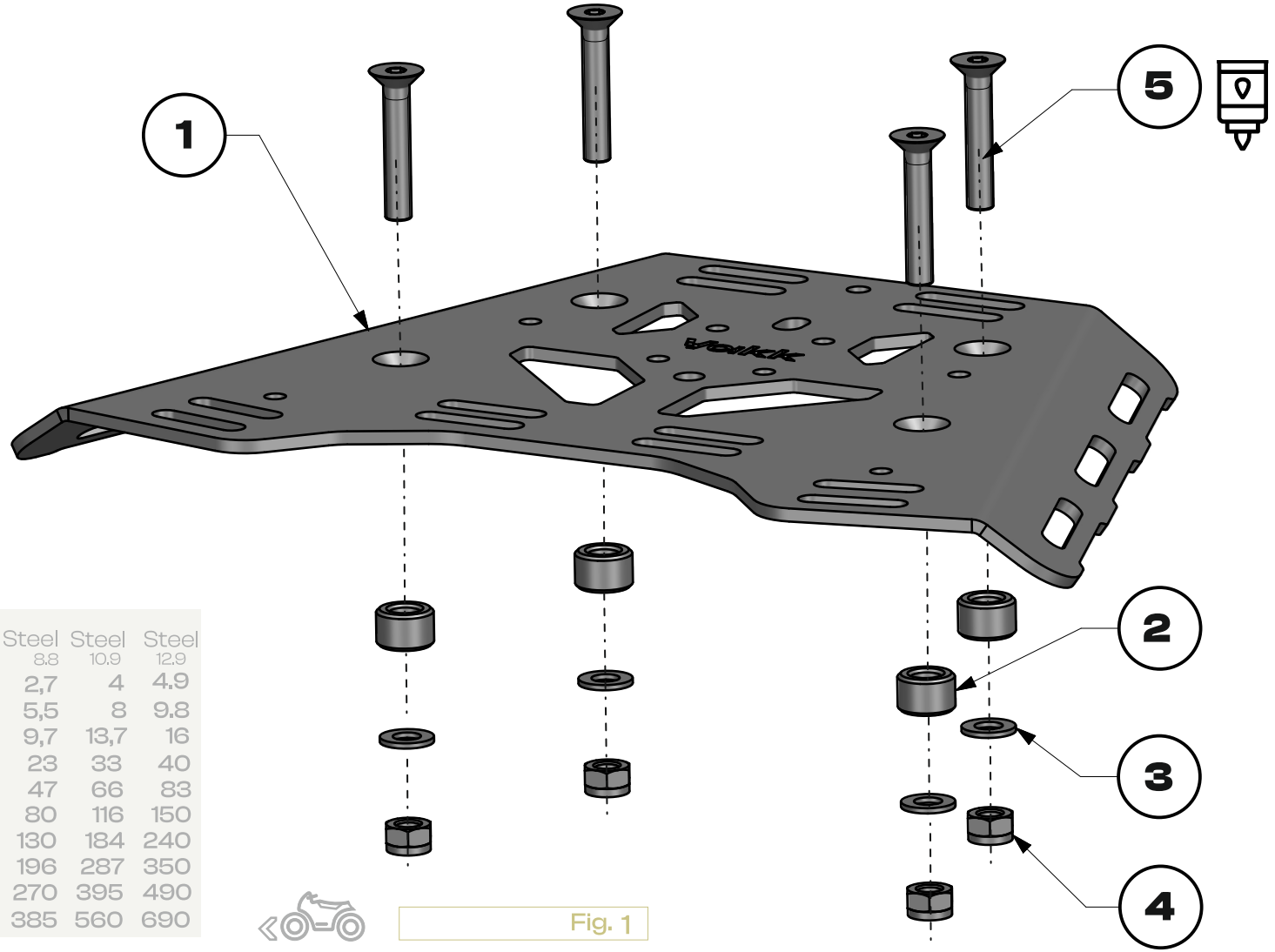

	Steel 8.8	Steel 10.9	Steel 12.9
M4	2,7	4	4.9
M5	5,5	8	9.8
M6	9,7	13,7	16
M8	23	33	40
M10	47	66	83
M12	80	116	150
M14	130	184	240
M16	196	287	350
M18	270	395	490
M20	385	560	690

Fig. 1

1 Luggage rack plate

1×

2 Spacer

D17xd9xH11 4×

3 Washer

M8-DIN 125 4×

4 Nut

M8-DIN 985 4×

5 Bolt

M8x45 -DIN 7991 4×

one person | use a medium-stregth | tighten with torque | OEM Original Equipment Manufacturer

Vakk EXP

assembly instructions

yakkexp.com

EXPLORE POSSIBILITIES

!!! Initially, attach the screws loosely.
After assembling everything together, tighten them with the appropriate force.

follow yakkexp join #yakkherd

2. Insert the spacer sleeve [2] into the mounting point. **[Fig. 1] , [Fig. 2]**

3. Fasten Luggage rack plate [1] using bolts [5] . **[Fig. 1], [Fig. 3]**

4. From underneath, place washers [3] onto the bolts, then secure them with nuts [4]. **[Fig. 1], [Fig. 4]**

Center the assembly along the motorcycle's centerline, then tighten all bolts to the specified torque.

2 Spacer	1 Luggage rack plate	3 Washer	4 Nut	5 Bolt
				
D17xd9xH11 4×	1×	M8-DIN 125 4×	M8-DIN 985 4×	M8x45 -DIN 7991 4×

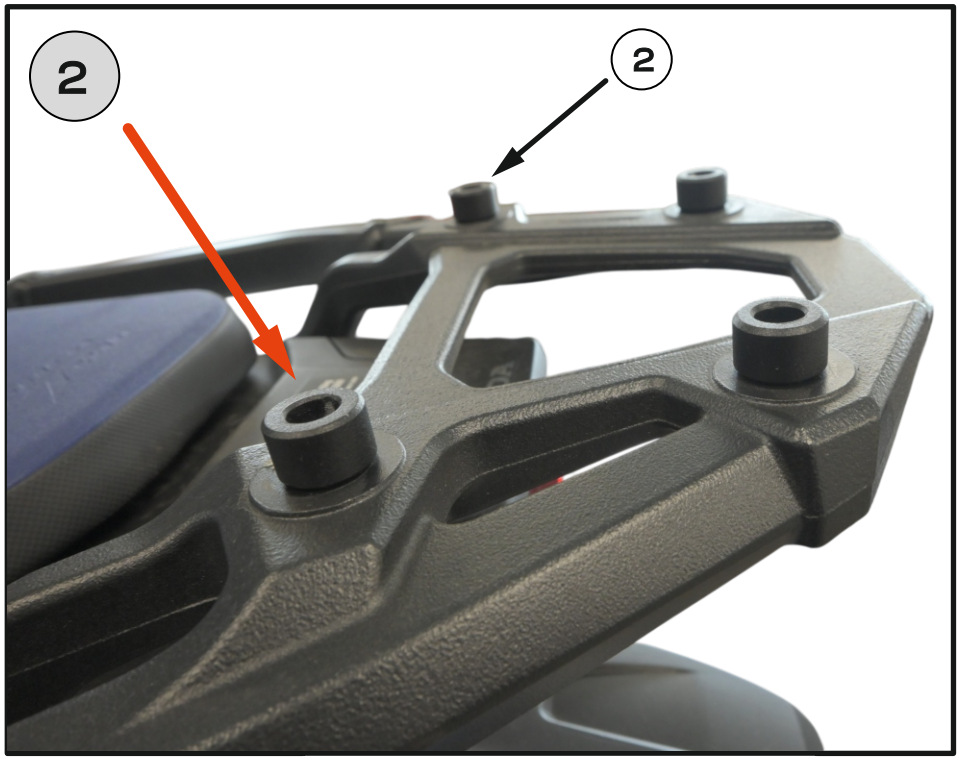

Fig. 2

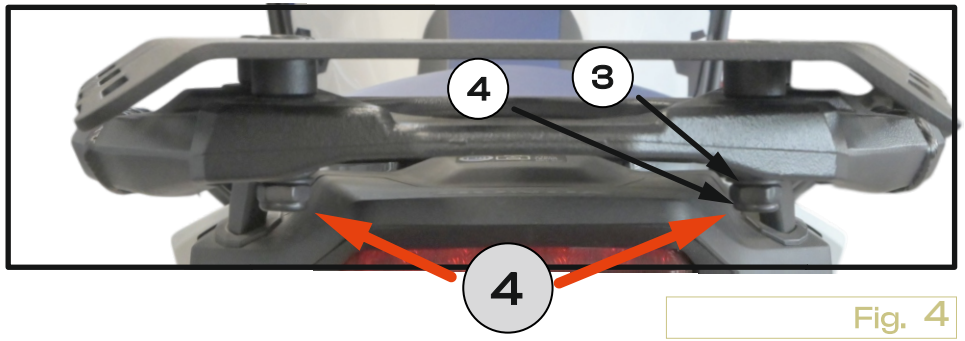

Fig. 4

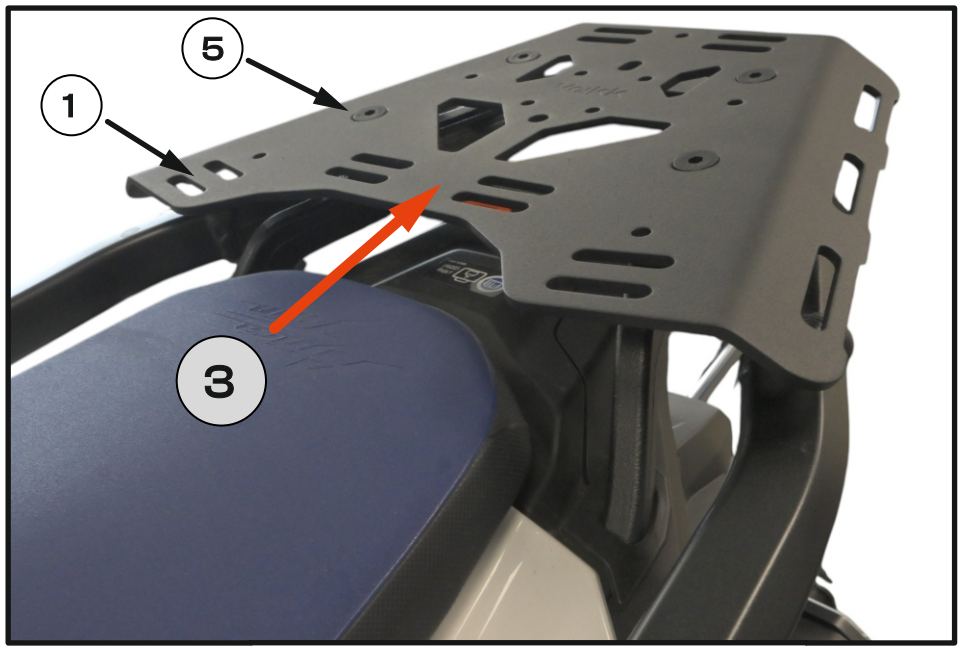

Fig. 3