Read before installation.
All bolts have to be finaly tighten after installation all parts on vehicle.

Ful Crash bars

BMW R 1300 GS

ID:2995823

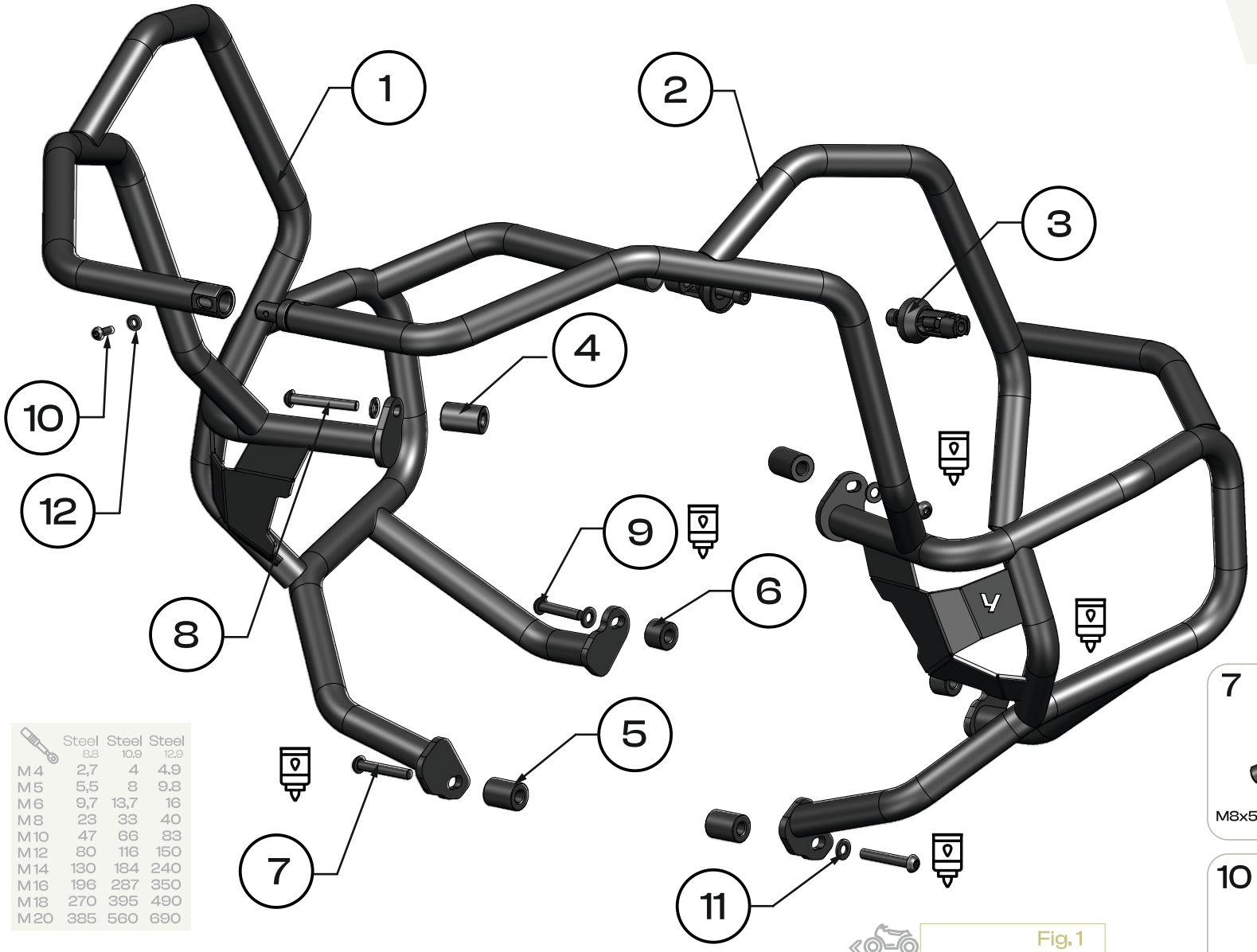

	Steel 8.8	Steel 10.9	Steel 12.9
M4	2,7	4	4.9
M5	5,5	8	9.8
M6	9,7	13,7	16
M8	23	33	40
M10	47	66	83
M12	80	116	150
M14	130	184	240
M16	196	287	350
M18	270	395	490
M20	385	560	690

Fig. 1

1 Right crash bar — 1×

2 Left crash bar — 1×

3 Frame suport — 2×

4 Spacer Sleeve — D22xd10xH32 — 2×

5 Spacer Sleeve — D22xd10xH28 — 2×

6 Spacer Sleeve — D22xd10xH16 — 2×

7 Bolt — M8x50 -DIN 7380 — 2×

8 Bolt — M8x55 -DIN 7380 — 2×

9 Bolt — M8x40 -DIN 7380 — 2×

10 Bolt — M6x16 -DIN 7380 — 1×

11 Washer — M8-DIN 125 — 6×

12 Washer — M6-DIN 125 — 1×

one person — use a medium-stregth — tighten with torque — OEM Original Equipment Manufacturer

Yakk EXP

assembly instructions

yakkexp.com

EXPLORE POSSIBILITIES

Read before installation.
All bolts have to be finaly tighten after install ation all parts on vehicle.

follow yakkexp join #yakkherd

Mount the crash bar as shown in the attached image, using the appropriate bolts, washers, and spacer sleeves according to the respective drawings at the mounting points. **[Fig.6]**

[Fig.2] Insert part **[3]** (Frame support) into the tube ends of parts **[2]** (Left crash bar) and **[1]** (Right crash bar).

[Fig.3] Align it properly and push it in until it seats fully. Then tighten the bolt so that part **[3]** is firmly secured inside the ends of **[1]** and **[2]**.

[Fig.4] - Fasten part **[2]** (Left crash bar) with bolt **[8]** (Bolt M8×55 – DIN 7380), using washer **[1]** (Washer M8 – DIN 125) and spacer **[4]** (Spacer Sleeve H32).

[Fig.5] - Fasten part **[2]** (Left crash bar) with bolt **[8]** (Bolt M8×55 – DIN 7380), using washer **[1]** (Washer M8 – DIN 125) and spacer **[5]** (Spacer Sleeve H28).

[Fig.7] - Fasten part **[2]** (Left crash bar) with bolt **[9]** (Bolt M8×40 – DIN 7380), using washer **[1]** (Washer M8 – DIN 125) and spacer **[6]** (Spacer Sleeve H16).

When tightening the bolts, apply a medium-strength threadlocker.

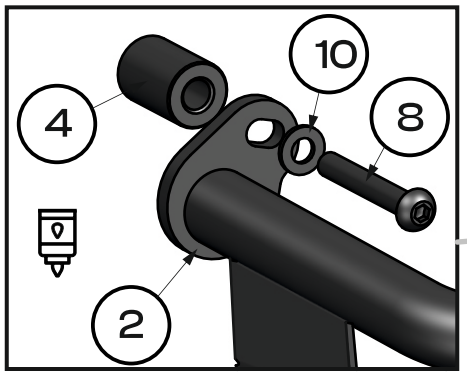

Fig. 4

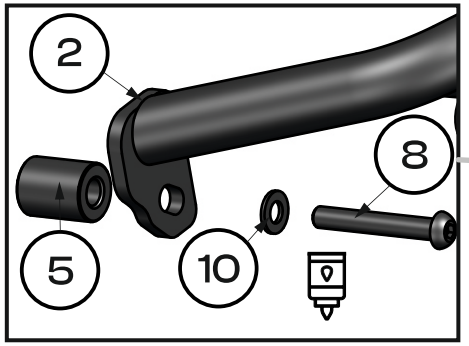

Fig. 5



Fig. 6

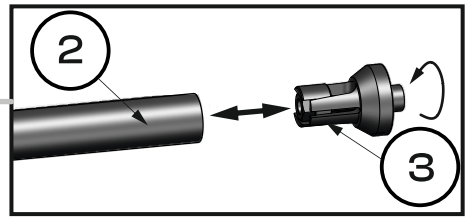

Fig. 2

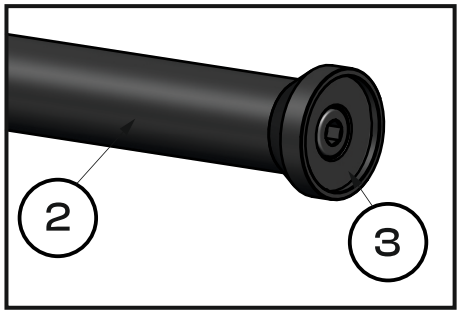

Fig. 3

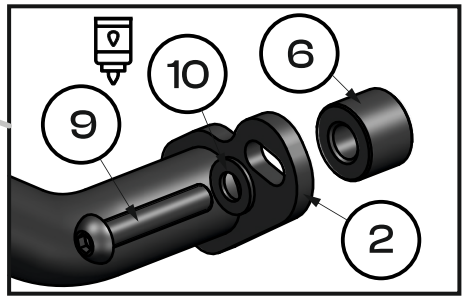

Fig. 7

one person | use a medium-stregth | tighten with torque | OEM Original Equipment Manufacturer

Yakk EXP

assembly instructions

yakkexp.com

EXPLORE POSSIBILITIES

Read before installation.
All bolts have to be finaly tighten after install ation all parts on vehicle.

Mount the crash bar as shown in the attached image, using the appropriate bolts, washers, and spacer sleeves according to the respective drawings at the mounting points. **[Fig. 8]**
[Fig. 11] - Fasten part **[1]** (Right crash bar) with bolt **[8]** (Bolt M8×55 – DIN 7380), using washer **[1]** (Washer M8 – DIN 125) and spacer **[4]** (Spacer Sleeve H32).
[Fig. 12] - Fasten part **[1]** (Right crash bar) with bolt **[7]** (Bolt M8×50 – DIN 7380), using washer **[1]** (Washer M8 – DIN 125) and spacer **[5]** (Spacer Sleeve H28).
[Fig. 10] - Fasten part **[1]** (Right crash bar) with bolt **[9]** (Bolt M8×40 – DIN 7380), using washer **[1]** (Washer M8 – DIN 125) and spacer **[6]** (Spacer Sleeve H16).
When tightening the bolts, apply a medium-strength threadlocker.

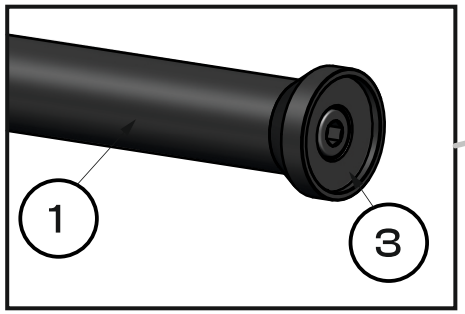

Fig. 9

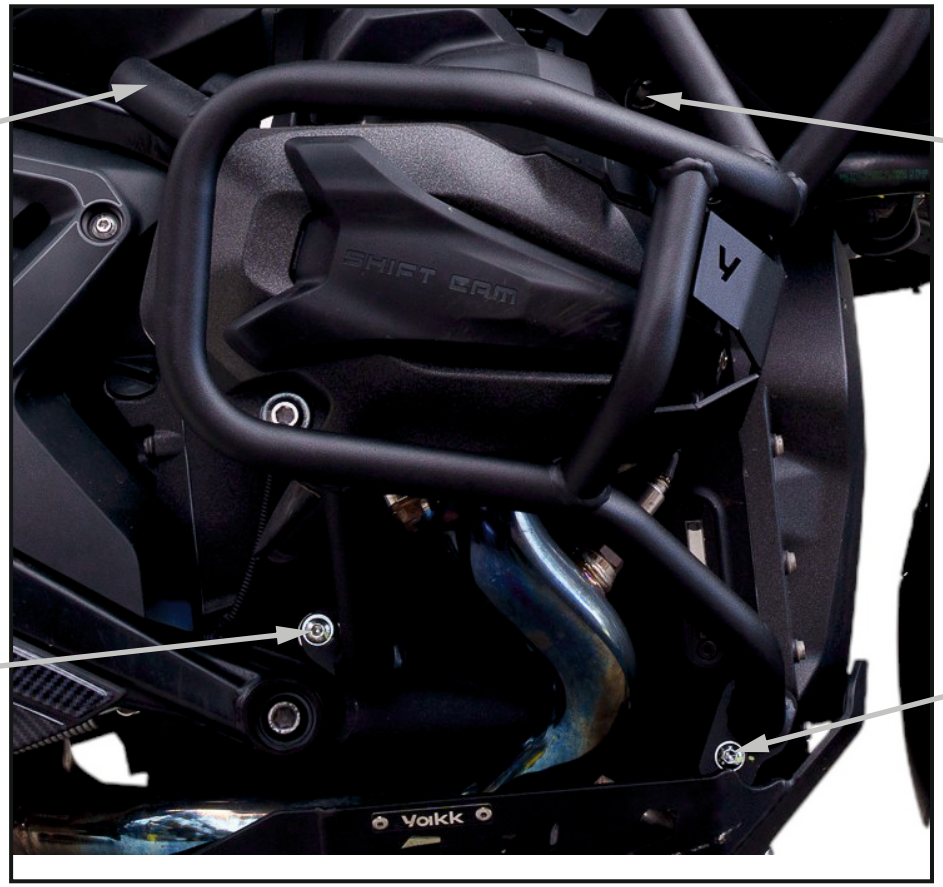

Fig. 8

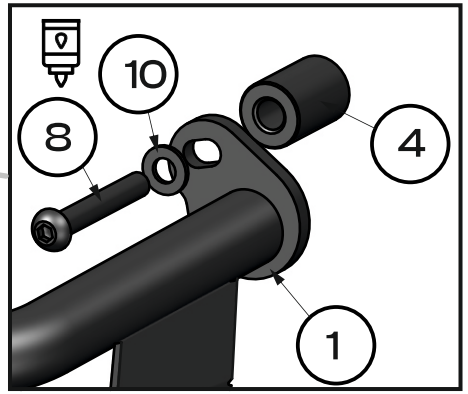

Fig. 11

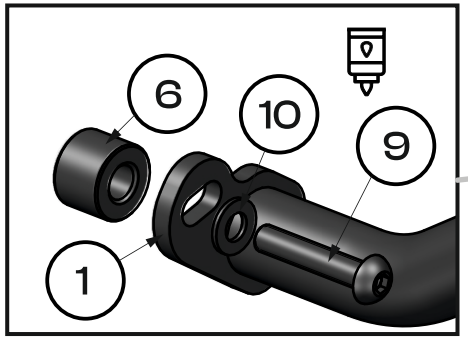

Fig. 10

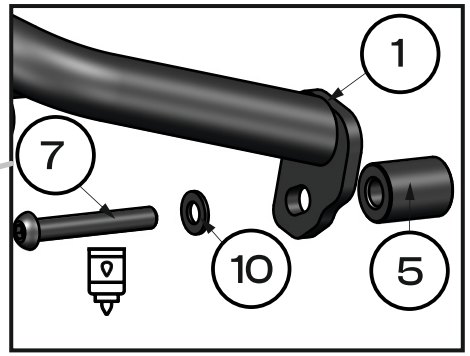

Fig. 12

one person | use a medium-stregth | tighten with torque | **OEM** Original Equipment Manufacturer

Read before installation.
All bolts have to be finaly tighten after installation all parts on vehicle.

Tighten the crash bars as shown in the illustration **[Fig.13]**
Join elements **[1]** Right crash bar and **[2]** Left crash bar so that it is possible to insert and tighten the bolt **[10]** Bolt M6×16-DIN7380together with the washer **[12]** Washer M6-DIN125.**[Fig.14]**



Fig. 13

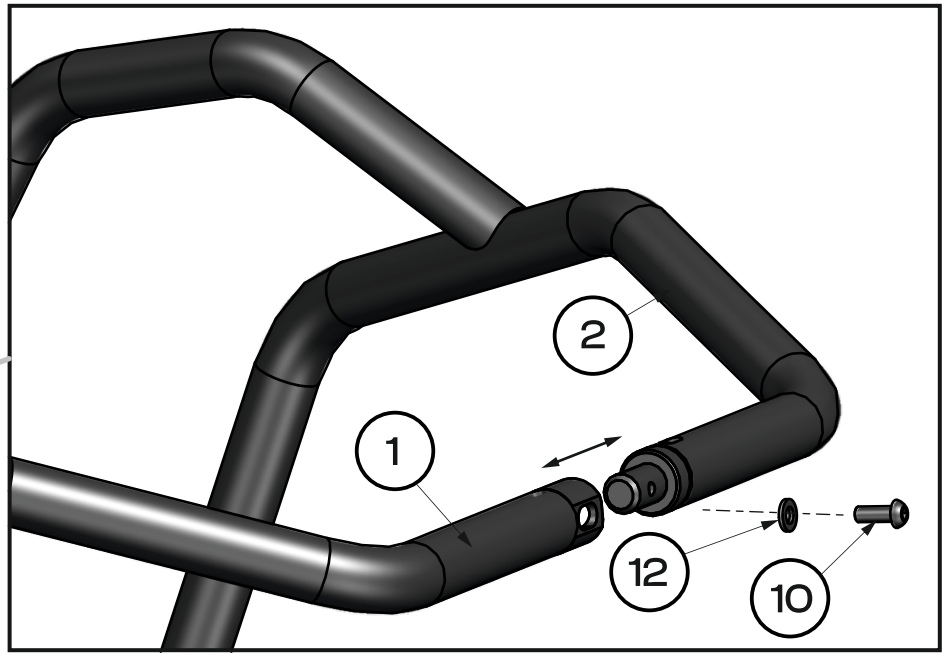

Fig. 14

After positioning and aligning the Right crash bar [1] and the Left crash bar [2] along the motorcycle's center axis (so that the crash bars sit straight), tighten all bolts to the specified torque.

one person | use a medium-stregth | tighten with torque | **OEM** Original Equipment Manufacturer